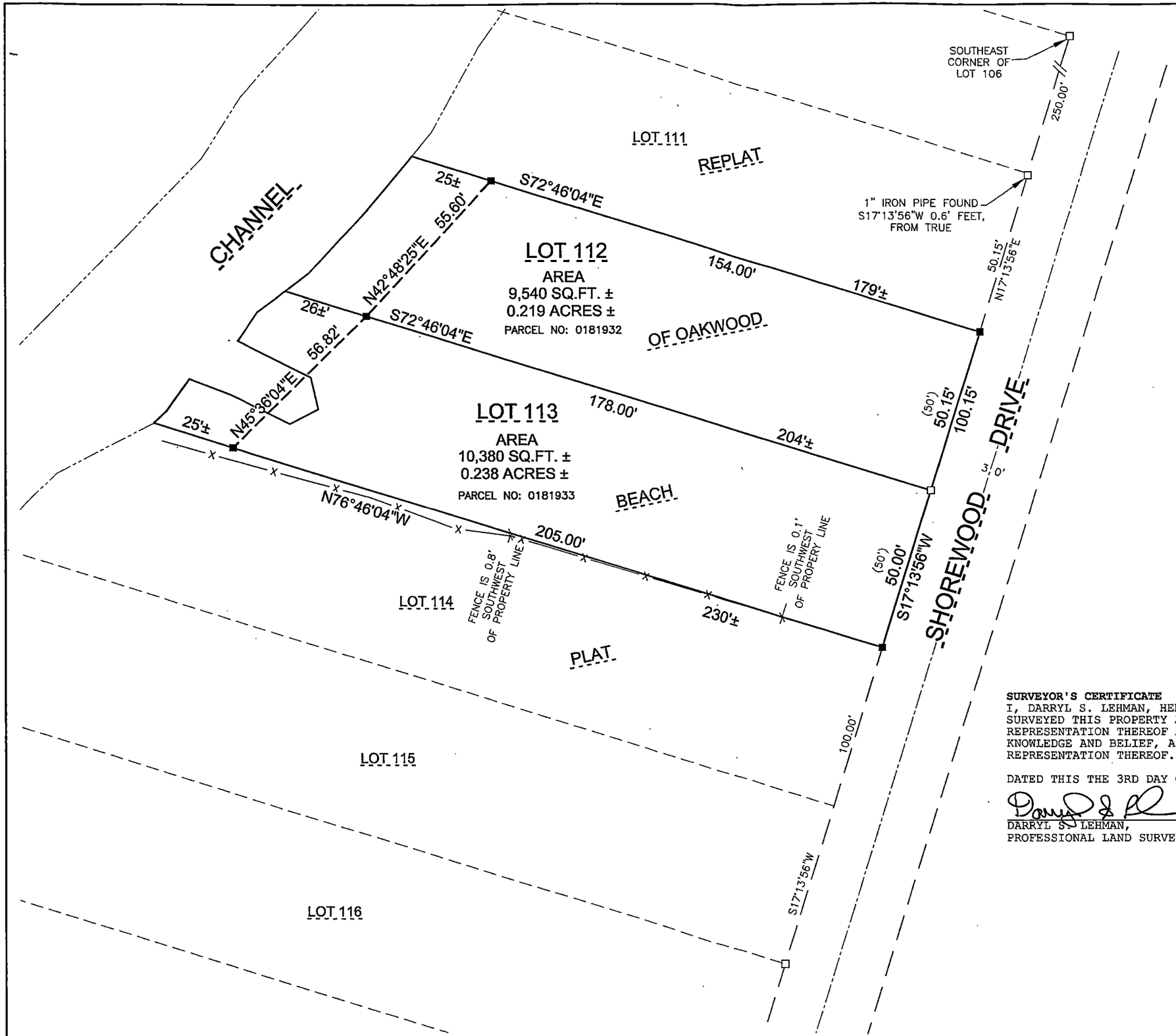

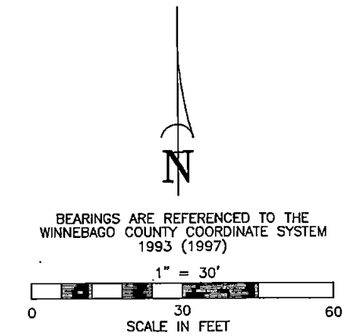

LEGEND

- ■ 1-1/4" O.D. IRON PIPE SET, 18" LONG, WEIGHING 1.130 LBS. PER LIN. FOOT
- □ 1-1/4" O.D. IRON PIPE FOUND
- —x— EXISTING FENCE
- ( ) RECORDED AS

SURVEYOR'S CERTIFICATE

I, DARRYL S. LEHMAN, HEREBY CERTIFY THAT I HAVE SURVEYED THIS PROPERTY AND THIS MAP IS A TRUE REPRESENTATION THEREOF AND IS, TO THE BEST OF MY KNOWLEDGE AND BELIEF, A TRUE AND ACCURATE REPRESENTATION THEREOF.

DATED THIS THE 3RD DAY OF APRIL, 2025

DARRYL S. LEHMAN,
PROFESSIONAL LAND SURVEYOR S-3255

WISCONSIN
DARRYL S. LEHMAN S-3255 OSHKOSH WI
LAND SURVEYOR

Martenson & Eisele, Inc.
Planning
Environmental
Surveying
Engineering
Architecture
1377 Midway Road
Menasha, WI 54952
www.martenson-eisele.com
info@martenson-eisele.com
920.731.0381 1.800.236.0381

NO.	DATE	REVISION	DRAWN BY LWL	CHECKED DSL	APPROVED DSL

PLAT OF SURVEY

PART OF LOT 112 AND LOT 113, REPLAT OF OAKWOOD BEACH PLAT, BEING PART OF GOVERNMENT LOT 4 IN SECTION 6, TOWNSHIP 18 NORTH, RANGE 17 EAST, TOWN OF OSHKOSH, WINNEBAGO COUNTY, WISCONSIN.

PREPARED FOR: BILL HICKEY
3030 SHOREWOOD DR
OSHKOSH WI 54901

SCALE	DATE
1"=30'	Apr. 2025

COMPUTER FILE
0-2944-002pos.dwg

DRAWING NO.
0-2944-002